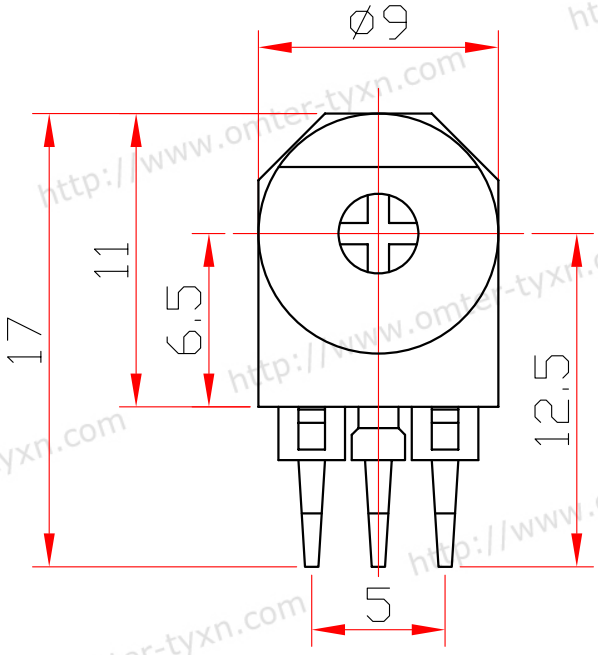

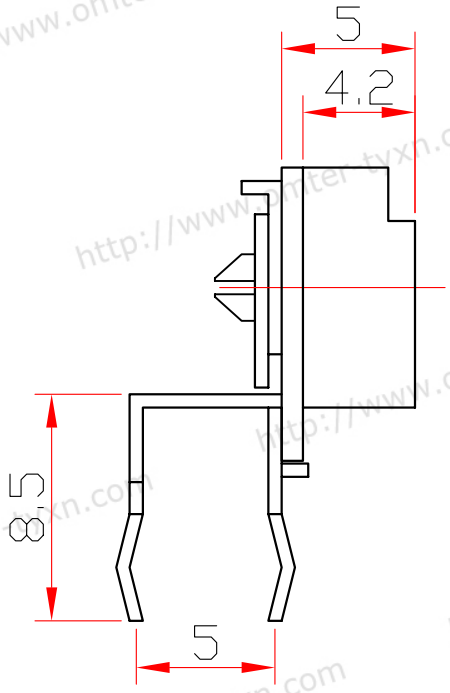

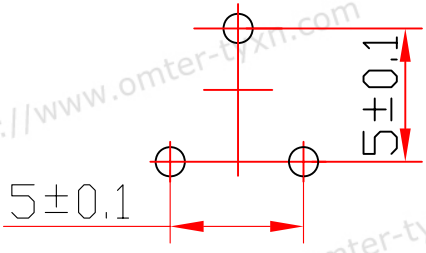

http://www.omter-tyxn.com